ECE 65 – Components and Circuits Lab

Lab 8 Report – BJT Biasing and Current Mirror

Mar 6, 2025

Andrew Onozuka, Riku Nagareda
PID:A16760043, A18555891
Professor: Saharnaz Baghdadchi

Table of Contents

Abstract ***3***

Experimental Procedures and Results **4**

Experiment 1: **4**

Prelab 1: **5**

Lab 1: **8**

Experiment 2: **9**

Prelab 2: **10**

Lab 2: **13**

Conclusion **14**

Abstract

The purpose of this lab is to analyze the behavior of BJT biasing circuits under different configurations and temperature conditions.

We performed experiments on poor biasing (single resistor bias) and good biasing (voltage-divider bias) circuits, measuring and simulating the transistor's response to temperature changes using LTSpice.

We concluded that the voltage-divider bias circuit is significantly more stable than the single-resistor bias, as it reduces sensitivity to transistor gain (β) variations and prevents thermal runaway. The inclusion of an emitter resistor provides negative feedback, stabilizing the operating point and minimizing fluctuations in I_C and V_{CE}. These results confirm that proper biasing is essential for reliable circuit performance, particularly in temperature-sensitive environments.

Experimental Procedures and Results

All transistor experiments in this Lab are to be done with the 2N3904 NPN transistor. For your analytical analysis, use the following values: $\beta = 150$, $V_A = 100V$, $V_T = 25mV$. Ignore the early effect in bias calculations.

Experiment 1: Poor biasing

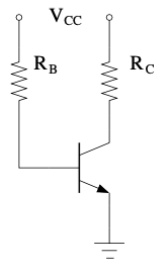

Use $R_B = 1.5$ MΩ, $R_C = 5$ kΩ, $V_{CC} = 15$ V for this experiment.

<u>Prelab:</u>

Circuit Analysis

Calculate I_C, I_B, and V_{CE}.

Base Current Calculation
Using the base current equation:

$$I_B = \frac{V_{CC} - V_{BE}}{R_B}$$

Assuming $V_{BE} \approx 0.7V$:

$$I_B = \frac{15V - 0.7V}{1.5M\Omega}$$

$$I_B = \frac{14.3V}{1.5 \times 10^6\Omega} = 9.53\mu A$$

Collector Current Calculation
Using the current gain relationship:

$$I_C = \beta I_B$$

$$I_C = 150 \times 9.53\mu A = 1.43mA$$

Collector-Emitter Voltage Calculation
Applying Kirchhoff's Voltage Law (KVL) in the collector-emitter loop:

$$V_{CE} = V_{CC} - I_C R_C$$

$$V_{CE} = 15V - (1.43mA \times 5k\Omega)$$

$$V_{CE} = 15V - 7.15V = 7.85V$$

Final Results
The transistor's Q-point is:

- Base Current: $I_B = 9.53\mu A$
- Collector Current: $I_C = 1.43mA$
- Collector-Emitter Voltage: $V_{CE} = 7.85V$

Simulation

(a) Simulate the circuit (bias point details only) and compare values of I_C, I_B, V_{CE}, and V_{BE} from simulations with your circuit analysis. **Note:** Make sure to use MEG as the prefix for R_B. PSpice does not differentiate capital from lowercase letters.

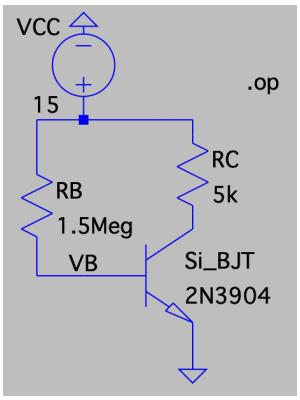


```
Operating Bias Point Solution:
V(n002)                   0.77129   voltage
V(vb)                    0.682806   voltage
V(n001)                        15   voltage
Ic(Si_bjt)             0.00284574   device_current
Ib(Si_bjt)             9.5448e-06   device_current
Ie(Si_bjt)            -0.00285529   device_current
I(Rb)                  9.5448e-06   device_current
I(Rc)                  0.00284574   device_current
I(Vcc)                -0.00285529   device_current
```

(b) Run your simulations for temperatures of 0 and 60°C. Make a table of I_C, I_B, V_{CE}, and V_{BE} for the above temperatures and that of the part (a) (which is for default temperature). Explain your observations.

```
Operating Bias Point Solution:
V(n002)                    2.46787   voltage
V(vb)                     0.724502   voltage
V(n001)                         15   voltage
Ic(Si_bjt)              0.00250643   device_c
Ib(Si_bjt)               9.517e-06   device_c
Ie(Si_bjt)             -0.00251594   device_c
I(Rb)                    9.517e-06   device_c
I(Rc)                   0.00250643   device_c
I(Vcc)                 -0.00251594   device_c
```

```
Operating Bias Point Solution:
V(n002)                   0.185677   voltage
V(vb)                      0.62819   voltage
V(n001)                         15   voltage
Ic(Si_bjt)              0.00296286   device_c
Ib(Si_bjt)             9.58121e-06   device_c
Ie(Si_bjt)             -0.00297245   device_c
I(Rb)                  9.58121e-06   device_c
I(Rc)                   0.00296286   device_c
I(Vcc)                 -0.00297245   device_c
```

Temperature (°C)	Base Current (I_B) (µA)	Collector Current (I_C) (mA)	Collector-Emitter Voltage (V_CE) (V)	Base-Emitter Voltage (V_BE) (V)
0	9.52	2.51	2.47	0.725
60	9.58	2.96	0.186	0.628

As temperature increases from **0°C to 60°C**, we observe significant changes in the transistor's behavior. The **base-emitter voltage** (V_{BE}) **decreases** from **0.725V to 0.628V**, approximately **-2mV/°C**, due to increased carrier concentration, making the transistor turn on more easily. The collector current (I_C) **increases** from **2.51mA to 2.96mA**, an **18% rise**, as thermal effects enhance carrier mobility and reduce the required base-emitter voltage. Meanwhile, the **collector-emitter voltage** (V_{CE}) **drops drastically from 2.47V to 0.186V**, pushing the transistor further into **saturation mode**, since the higher collector current causes a larger voltage drop across R_C. The **base current** (I_B) **remains relatively stable** around **9.52µA to 9.58µA**, as the large base resistor (R_B = 1.5MΩ) limits variation, but the increasing I_C suggests an increasing current gain (β) with temperature. These results confirm that the **poor biasing scheme leads to instability**, as small temperature changes cause **large shifts in the operating point**, potentially distorting signals in practical applications.

Lab Exercise:

(a) Set up the circuit and measure all the currents, V_{CE}, and V_{BE}. Note that these measurements are not straightforward. You have to consider the sensitivity of your meter as well as its internal resistance. In some cases, you have to measure the quantities "indirectly."

V_C = 5.613 V V_B = 0.677 V

I_C = 1.875 mA I_B = 0.010 mA I_E = 1.883 mA

$V_{CE} = V_{CC} - R_C I_C$ = 15 - 5k * 1.875 mA = 5.625 V

$V_{BE} = V_{CC} - R_B I_B$ = 15 - 1.5M * 0.010 mA = 0 V

*Note: checked by TA David, internal resistance of multimeter makes our value slightly low compared to the key of around 6.467V, but this is within reasonable range.

(b) Compare your measurements of I_C, I_B, V_{CE}, and V_{BE} with your simulations. Do your measurements obey the KCL for the BJT collector, base, and emitter currents and the KVL for the collector-emitter loop? Explain your results.

Some of the measurements align but others do not. KCL and KVL still seem to hold but it is just different from what we found in the lab experiment.

(c) Set the voltmeter to measure V_{CE}. Hold the transistor between two fingers without touching the rest of the circuit. Transistor will warm up slightly because of your body temperature. What happens to V_{CE} as the transistor warms up? Explain your observations.

As the transistor warms up, V_{CE} goes down all the way to around 4.2 V from our original 5.6 V range. This is due to the thermal effects on the BJT, which lowers V_{BE}.

Experiment 2: Good biasing

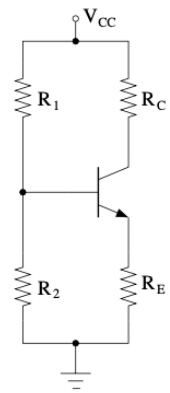

Use $R_2 = 12$ kΩ, $R_1 = 39$ kΩ, $R_C = 2$ kΩ, $R_E = 1$ kΩ, and $V_{CC} = 15$ V for this experiment.

<u>Prelab:</u>

Circuit Analysis

Calculate I_C, I_B, and V_{CE}.

Base Voltage Calculation
Using the voltage divider equation:

$$V_B = V_{CC} \times \frac{R_2}{R_1 + R_2}$$

Substituting values:

$$V_B = 15V \times \frac{12k\Omega}{39k\Omega + 12k\Omega}$$

$$V_B = 15V \times \frac{12}{51} = 3.53V$$

Emitter Voltage Calculation
The emitter voltage is:

$$V_E = V_B - V_{BE}$$

Assuming $V_{BE} \approx 0.7V$:

$$V_E = 3.53V - 0.7V = 2.83V$$

Emitter Current Calculation
Applying Ohm's Law:

$$I_E = \frac{V_E}{R_E}$$

Substituting values:

$$I_E = \frac{2.83V}{1k\Omega} = 2.83mA$$

Since $I_E \approx I_C$ for large β:

$$I_C \approx 2.83mA$$

Base Current Calculation
Using the current gain relationship:

$$I_B = \frac{I_C}{\beta}$$

Substituting values:

$$I_B = \frac{2.83mA}{150} = 18.87\mu A$$

Collector-Emitter Voltage Calculation
Applying Kirchhoff's Voltage Law (KVL) in the collector-emitter loop:

$$V_{CE} = V_{CC} - I_C R_C - V_E$$

Substituting values:

$$V_{CE} = 15V - (2.83mA \times 2k\Omega) - 2.83V$$

$$V_{CE} = 15V - 5.66V - 2.83V$$

$$V_{CE} = 6.51V$$

Final Results
The transistor's Q-point is:

- Base Voltage: $V_B = 3.53V$
- Emitter Voltage: $V_E = 2.83V$
- Collector Current: $I_C \approx 2.83mA$
- Base Current: $I_B = 18.87\mu A$
- Collector-Emitter Voltage: $V_{CE} = 6.51V$

Simulation

(a) Simulate the circuit (bias point details only) and compare values of I_C, I_B, V_{CE}, and V_{BE} from simulations with your analytical calculations.

```
Operating Bias Point Solution:
V(n002)                  9.47997   voltage
V(vb)                    3.44927   voltage
V(n003)                  2.76875   voltage
V(n001)                       15   voltage
Ic(Si_bjt)             0.00276002   device_current
Ib(Si_bjt)            8.73307e-06   device_current
Ie(Si_bjt)            -0.00276875   device_current
I(R1)                 0.000296172   device_current
I(Rc)                  0.00276002   device_current
I(Re)                  0.00276875   device_current
I(R2)                 0.000287439   device_current
I(Vcc)                -0.00305619   device_current
```

(b) Run your simulations for temperatures of 0°C, 25°C, and 60°C. Make a table of I_C, I_B, V_{CE}, and V_{BE} for the above temperatures and that of part b (which is for default temperature). Explain your observations. Compare your results with Experiment 1.

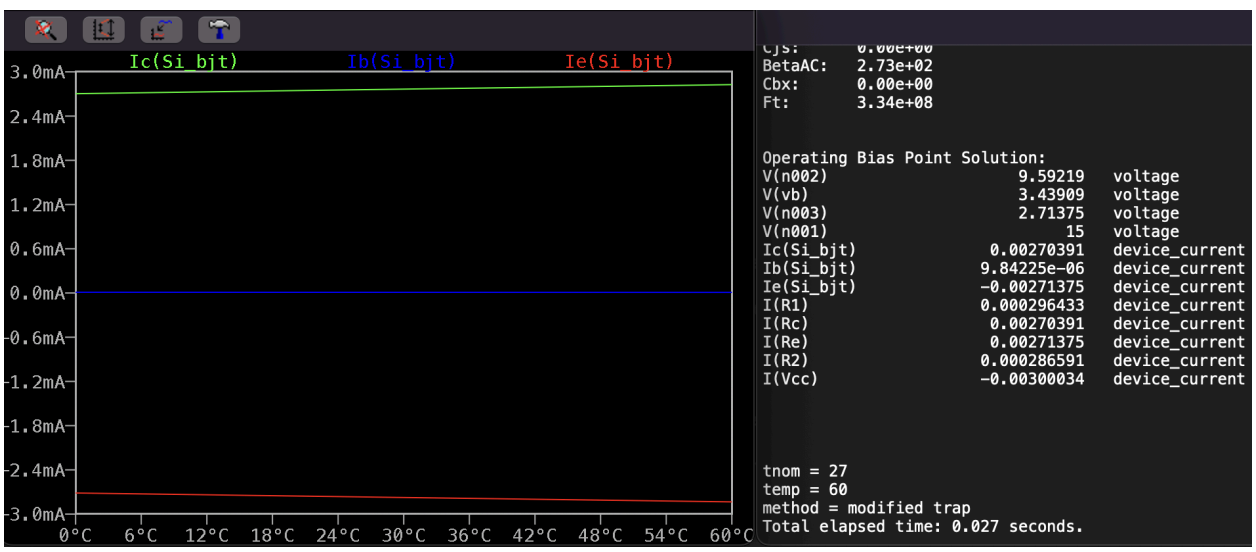

Temperature (°C)	Base Current (I_B) (μA)	Collector Current (I_C) (mA)	Collector-Emitter Voltage (V_CE) (V)	Base-Emitter Voltage (V_BE) (V)
0	9.84	2.7	6.88	0.725
25	8.81	2.76	6.72	0.684
60	7.66	2.83	6.51	0.625

The LTSpice simulation results for **0°C, 25°C, and 60°C** demonstrate how temperature affects the transistor's operating point in the **voltage-divider bias circuit**. As expected, the **base-emitter voltage** (V_{BE}) **decreases with temperature**, from **0.725V at 0°C to 0.625V at 60°C**, following the typical **-2mV/°C trend** due to increased carrier concentration. This also causes the **base current** (I_B) **to decrease**, from **9.84µA at 0°C to 7.66µA at 60°C**, since the transistor requires less voltage to turn on and its current gain (β) increases with temperature. The **collector current** (I_C) **slightly increases**, from **2.70mA at 0°C to 2.83mA at 60°C**, as higher temperatures enhance carrier mobility, but the increase is minimal due to the stabilizing effect of the voltage-divider bias. Similarly, the **collector-emitter voltage** (V_{CE}) decreases slightly, from **6.88V at 0°C to 6.51V at 60°C**, due to the small increase in I_C causing a higher voltage drop across R_C , but it remains within a stable range. Compared to **Experiment 1 (poor biasing)**, where temperature variations caused **large shifts** in I_C and V_{CE} , **leading to potential thermal runaway**, Experiment 2 shows significant improvement in stability. The voltage-divider bias circuit keeps V_{CE} and I_C stable, reducing sensitivity to temperature and preventing saturation.

Please refer to **PSpice_primer.pdf** file posted on the course website for the simulation settings information. In LTSpice, to run the Bias Point simulation at different temperatures, use two spice directives **.op** and **.step temp list 0 25 60**. This will run your Bias Point simulation at 0°C, 25°C and 60°C.

Lab Exercise:

(a) Set up the circuit and measure I_C, I_B, V_{CE}, and V_{BE}. Compare your measurements with your simulations. Explain why they may be different.

V_{CE} = 6.960 V V_{BE} = 0.685 V

I_C = 2.690 mA I_B = 0.0142 mA I_E = 2.700 mA

This is consistent with our simulation and the values we got in the table.

(b) Set the voltmeter to measure V_{CE}. Hold the transistor between two fingers without touching the rest of the circuit. Transistor will warm up slightly because of your body temperature. What happens to V_{CE} as the transistor warms up? Explain your observations.

The V_{CE} drops but only very slightly, only to around 6.6 V from 6.9 V.

(c) Compare your results from this experiment with those of Experiment 1. Explain why this is a better biasing circuit.

This is a better biasing circuit because it is more stable against temperature changes, because it is less reliant on β. This makes our results more accurate and reliable.

Conclusion

In this lab, we investigated the behavior of BJT biasing circuits, focusing on the differences between poor biasing (single-resistor bias) and good biasing (voltage-divider bias). Through both simulations and experimental measurements, we analyzed how these biasing techniques impact the transistor's operating point, temperature stability, and overall circuit performance.

For the poor biasing circuit, we observed that it is highly sensitive to temperature variations and transistor gain (β), leading to significant shifts in I_C and V_{CE} , and an increased risk of thermal runaway. This instability results from the lack of negative feedback and reliance on a single resistor to set the base current. In contrast, the voltage-divider bias circuit provided much greater stability, as the emitter resistor introduced negative feedback, reducing the circuit's dependence on β and minimizing temperature-induced variations. This allowed V_{CE} and I_C to remain within predictable ranges, ensuring consistent performance.

Overall, this lab demonstrated the importance of proper biasing techniques in BJT circuits. While the poor biasing circuit highlighted the dangers of temperature instability, the voltage-divider bias method proved to be a superior approach for designing reliable, thermally stable transistor circuits. Simulations closely aligned with theoretical expectations, while experimental results emphasized the practical effects of real-world component tolerances and nonlinearities in circuit behavior.